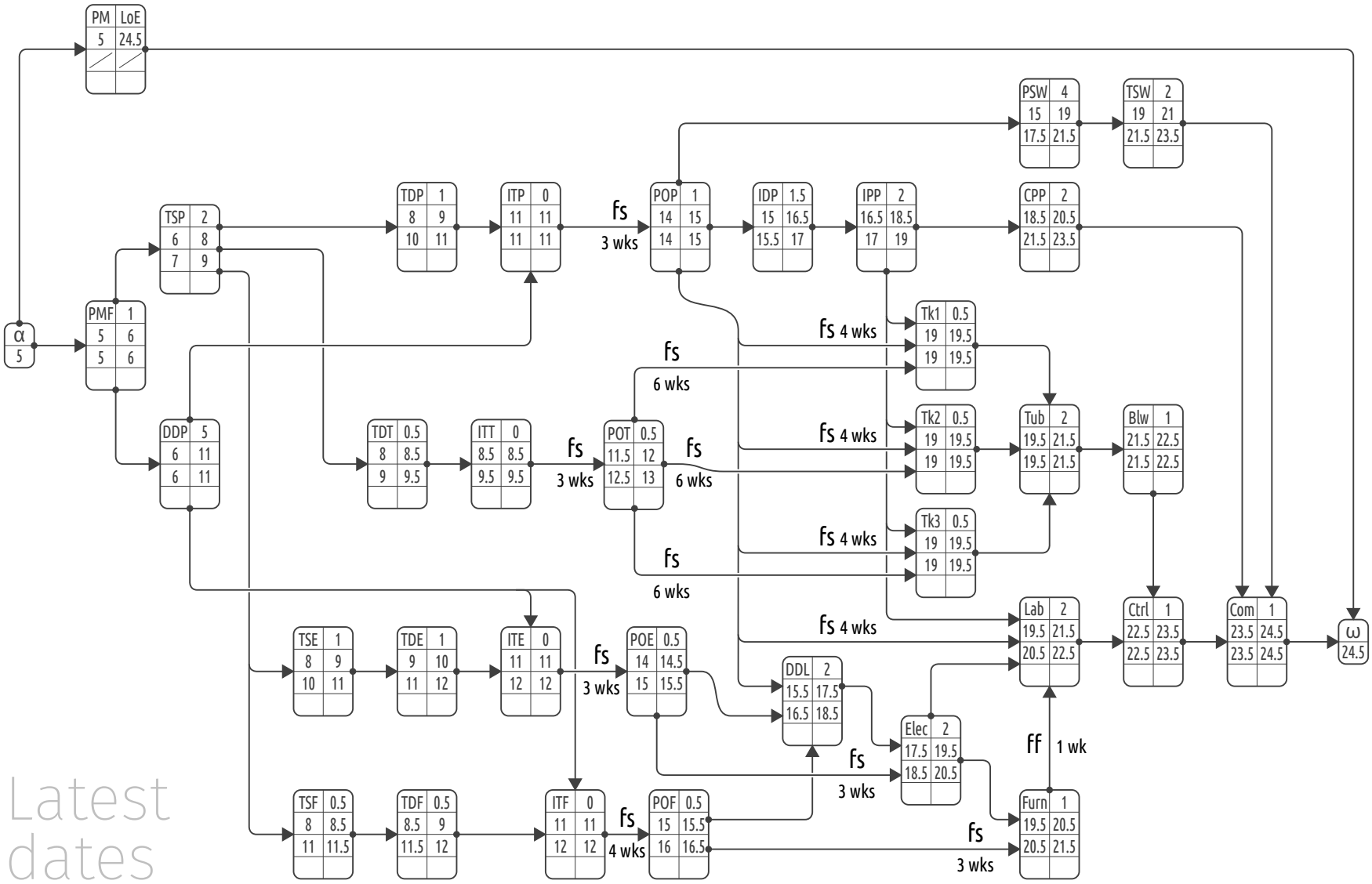

Latest dates